A MOTOR PRIMER - PART 5

Paper No. PCIC 2005-9

Bryan Oakes
Senior Member, IEEE
Rockwell Automation
101 Reliance Road
Kings Mountain, NC 28086
USA
bkoakes@powersystems.rockwell.com

Gary Donner
Fellow, IEEE
Shell Oil Products US
2101 E Pacific Coast Hwy
Wilmington, CA 90748
USA
gldonner@ieee.org

Steve Evon
Senior Member, IEEE
Rockwell Automation
6040 Ponders Ct.
Greenville, SC 29615
USA
stevon@powersystems.rockwell.com

Wayne Paschall
Member, IEEE
Rockwell Automation
101 Reliance Road
Kings Mountain, NC 28086
USA
wpaschall@powersystems.rockwell.com

Abstract - In recent years much has been written about motors concerning efficiencies, vibration and resonance conditions as they relate to the American Petroleum Institutes (API) Standard 541 and motor diagnostics. Most of these papers and articles assume that the reader has significant knowledge of motor theory and operation. However, this assumption is overly optimistic, considering that only a few colleges teach motor theory today and that application experience at motor user locations has been reduced in recent years.

Index Terms – AC Induction Motors, Efficiency, Torsional, Lateral Critical Speed, Vibration, Shaft Probes, Unbalance Response, and Residual Unbalance.

I. INTRODUCTION

This paper is the fifth in a series where the authors discuss “Frequently asked Questions” by working engineers in industry. The authors will present motor theory and application information with a reference list that will help working engineers increase their understanding and knowledge of motors. This series also serves as a reference for those who apply and specify motors. This paper focuses on torsional and lateral resonance analysis, motor efficiencies and the effects of vibration on motor life. The first four papers in this series can be found in the IEEE Conference Records and Transactions.

II. WHAT PURPOSE DOES PERFORMING A TORSIONAL ANALYSIS SERVE AND WHEN IS IT REQUIRED? WHAT OCCURS DURING A TORSIONAL RESONANT CONDITION?

Torsional vibration is an oscillatory twisting of the shaft. A motor by design applies a torsional force to the driven equipment and the driven equipment applies an equal and opposite force back to the motor. The shaft system deflects in torsion or twists away from the free position. At free vibration, and at its natural frequencies, the twist is free to unwind, twisting back to the free position and, if undamped, twist an equal amount in the opposite direction. A system having a natural frequency equal to a driving frequency is in a state of resonance. This torsional oscillation loads and unloads the shaft system and at a resonant condition, the shaft can actually be loaded in each direction. These torsional vibrations produce shear stresses on the shaft leading to crack development at discontinuities with the end result being a shaft failure that occurs due to fatigue. Identification of a failure due to torsional resonance exists within the failure itself. Cracks develop on the shaft surface 45° to the shaft axis as shown in Figure 1.

Unlike lateral vibration that can be detected with the use of proximity probes or accelerometers, torsional vibration can exist with considerable amplitudes and be undetectable without appropriate detection equipment until a failure occurs. The normal torsional excitation frequencies are 1 times mechanical and electrical up to 6 times running speed.

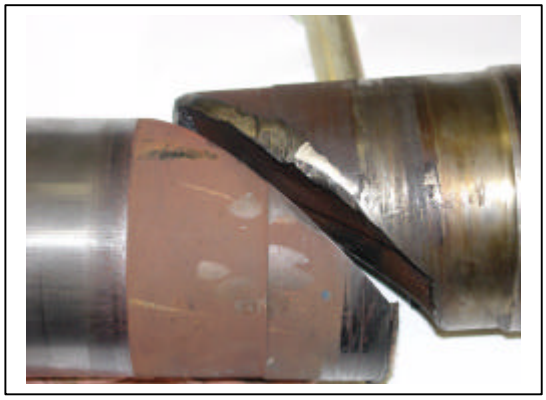

Figure 1. Shaft torsional failure

The system's torsional resonance locations must avoid the excitation forcing frequencies. Figure 2 shows a torsional natural frequency map that identifies natural frequencies in respect to the multiples of running speed that are of concern. These maps identify the locations of torsional natural frequencies, the corresponding speeds these natural frequencies cross and the required block out ranges needed to avoid resonance at these frequencies.

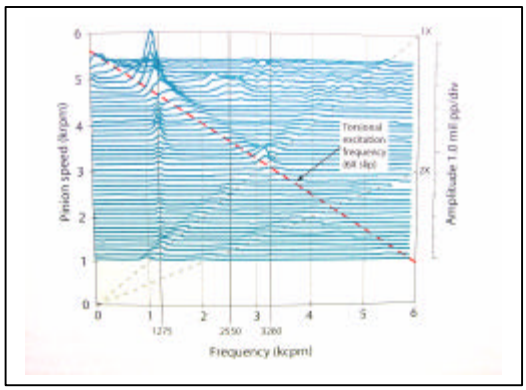

Figure 2. Torsional natural frequency map

Sources for this type of vibration exist during acceleration in induction motors that exhibit torque oscillations at line frequency. Another source is the driven machine itself. Reciprocating compressors, chippers, and crushers generate steady-state torque pulsation at various frequencies and can reach destructive magnitudes even without resonance. Inverters also generate oscillating motor torques at frequencies dependent upon speed. Some types of inverters give rise to large fifth and seventh harmonic currents and thereby sixth harmonic torque. Depending on the operating speed, it might be possible to operate close to a torsional natural frequency. That would then provide an opportunity for high alternating torques.

Determining the system's torsional resonance frequency during the motor design stage requires an exchange of information from the manufacturer and driven equipment provider. Motor manufacturers should provide the following information:

- Torsional stiffness of the rotating assembly
- Shaft detail drawing for fatigue analysis
- Rotating assembly weight
- Shaft material attributes
- Inertia

Driven equipment manufacturers should provide the following information to the motor supplier:

- Torque angle effort curve for pulsating loads of driven equipment at each load condition
- Harmonic torque analysis of system
- System torsional resonance analysis. First four resonant frequencies and mode shapes.
- Maximum mean and cyclic motor shaft forces.

An exchange of this information will provide the fundamental elements for determining the torsional resonant frequencies and forced responses of the system in the design stages eliminating possible problems in the field.

If torsional issues are suspected in an existing application, field-testing will be necessary. One method involves using a strain gage network. This approach evaluates the actual transmitted and dynamic torque in a shaft. Strain levels should be measured at various load conditions and for starting and acceleration conditions. Other methods involve using encoders or a strobe light.

Shifting a torsional resonance frequency may require changes to the coupling mass and stiffness, and special shaft diameters. A complete drive train system analysis must be performed to assure a torsional resonance will not be excited and forced response stresses are within material strength limits.

It's important that system responsibility be clearly defined during the bidding process. Typically, the driven equipment manufacturer accepts system responsibility but this becomes less clear when packagers are involved or when components are purchased directly by an end user.

Synchronous motors also are a potential source of very significant transient torques. Discussion of this subject is very complex and exceeds the scope of this paper. Users of large synchronous motors are encouraged to research this subject before selecting synchronous motors.

III. WHAT PURPOSE DOES PERFORMING A LATERAL CRITICAL SPEED ANALYSIS SERVE AND WHEN IS IT REQUIRED? CAN I PERFORM THIS ANALYSIS MYSELF? WHAT SOFTWARE IS AVAILABLE?

Any body that is free to vibrate has natural frequencies of oscillation. The amplitude of oscillation will depend on its mass, length, and other mechanical properties. Its natural frequencies depend on its density and stiffness, diameter and length. The body stops vibrating because it is performing work and thus losing energy. When a body is subjected to a vibrating source of energy that has the same frequency as the natural frequency of the body, it will start to oscillate in sympathy with the external source. This phenomenon is called resonance.

When the rotating assembly operates at one of these natural frequencies, it deflects and goes into a state of resonance. This condition is known as a lateral critical speed. All rotating assemblies have lateral critical speeds but they will not pose a problem unless a critical speed coincides with a forcing function.

Forcing functions, which are to be avoided, include the following:

- Running speed and twice running speed
- Line frequency and twice line frequency
- Driven equipment frequencies
- Drive harmonic frequencies

When a machine passes through a lateral critical speed, the rotating assembly is known as a flexible shaft design. A rigid shaft design is one where the lateral critical speed is above the operating speed. Knowing the location of a lateral critical speed is essential to successful motor operation. Whether the rotating assembly is rigid or flexible the first lateral critical speed must have a separation margin of al least 15% from operating speed. Maintaining this separation margin prevents potentially damaging vibration levels that may lead to bearing failure.

There are three calculation methods that will approximate the lateral critical speed. They are the Frequency Equation, Rayleigh-Ritz Equation and Dunkerley Equation.

Calculating a lateral critical speed requires knowing at least the following:

- Rotating Assembly Geometry
- Rotating Assembly Mass
- End Restraint Conditions

The Frequency Equation assumes a shaft with a single attached mass. The calculation requires knowing the mass of the system and the shaft -spring constant.

$$\omega_c = (k / m)^{1/2}$$

Where:
k = spring constant (lb/in)
m = mass (lbs-sec^2/in)

The Rayleigh-Ritz Equation applies to a shaft carrying several concentrated masses.

$$\omega_c = (g^j_1 \Sigma W_n \delta_n / {}^j_1 \Sigma W_n \delta^2_n)^{1/2}$$

Where:

W_n = weight of nth mass (lbs)
δ_n = static deflection at the nth mass (in)
j = total number of masses
g = gravitational constant (in/sec^2)

The Dunkerley Equation is another approximation for the first lateral critical speed of a multimass system.

$$1/\omega^2_c = (1 / \omega^2_1) + (1 / \omega^2_2) + (1 / \omega^2_3) + \ldots$$

Where:

ω_c = first critical speed of multi-mass system
ω_1 = critical speed with only one mass
ω_2 = critical speed with only mass two
ω_3 = critical speed with only mass three, etc

These calculation methods approximate lateral critical speed. A more accurate analysis using software requires the following information:

a. Support (base, frame, bearing-housing, and bearing) stiffness, mass, and damping characteristics.
b. Bearing lubricant-film stiffness and damping characteristics.
c. Operating speed ranges.
d. Rotor masses.
e. Mass moment of the coupling half

There are many program/software options available for calculating lateral critical speeds. The difficulty for an end user in attempting to perform this calculation is what is the rotating assembly geometry and what assumptions do motor suppliers use in calculating lateral critical speeds. It is recommended the user request lateral critical speed maps on ASD fed machines or those going into critical applications as defined by API-541 4th Edition See figures 3 and 4 for examples of unbalanced response and an undamped critical speed map.

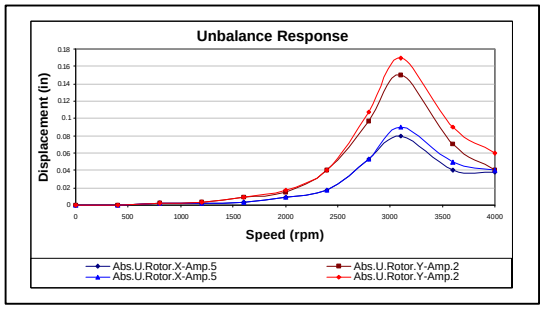

Figure 3. Unbalance response analysis

Figure 3 represents the unbalance response analysis of the system. This plot of vibration amplitude versus speed shows the expected response of the rotating assembly to unbalance forces.

Figure 4 represents the undamped shaft critical speed map. The graph plots out the support system stiffness versus speed. Where the operating speed intersects the support system stiffness reveals the location of the lateral critical speed for that system.

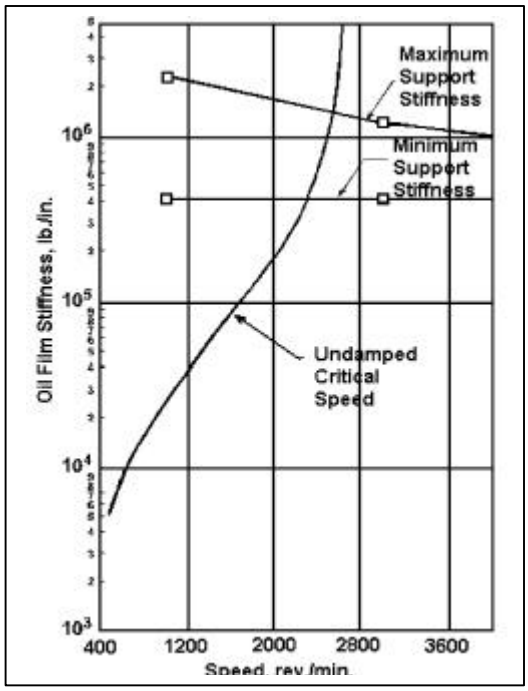

Figure 4. Undamped lateral critical speed map

Test data can confirm lateral critical speeds. Test conditions at the manufacturer's facility will differ from the onsite installation, which may result in a small change in the first critical speed. To have on site baseline data, it is recommended to perform a coast down test onsite with the motor properly mounted on the base.

The coast down test is performed in an uncoupled condition from the maximum operating speed, cutting the power and allowing the motor to coast to rest. The coast down test will confirm the location of the first lateral critical speed. Motors with a rigid shaft design will require an overspeed coast down test from at least 15% to 20% above operating speed, this test can be performed at the motor manufacturers test facility. NEMA guidelines for operating motors above their intended operating speed should be followed to prevent possible damage to the motor.

To achieve the best test results on a sleeve bearing motor it is recommended that two shaft probes 90° apart be used to measure the overall vibration amplitudes at each bearing. The shaft probe is a non-contacting probe that measures the movement of the shaft on the oil film and relative to the bearing housing. The oil film that supports the rotating assembly damps the vibration on sleeve bearing motors; therefore shaft probes will provide a more accurate result of the rotating assembly's behavior within the bearing system than seismic pickups mounted on the bearing housing. Velocity transducers mounted on the bearing housing are not as accurate on sleeve bearing motors as an amplitude response. Results of the coast down are typically displayed using the Bode plot format as shown in Figure 5.

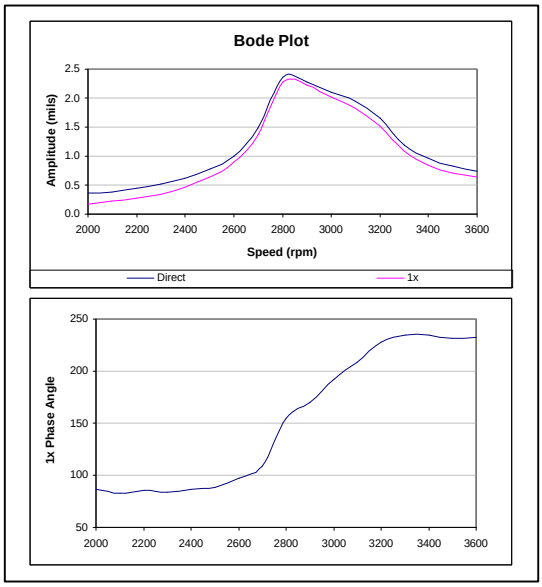

Figure 5. Bode plot display

The Bode plot displays the rotating assembly's vibration amplitude and phase angle as a function of the shaft's rotational speed. Other plot formats for viewing the coast down information include Cascade, Waterfall, and Polar plots.

The lateral critical speed vibration may be well damped and by applying a deliberate unbalance of $4U_b$ per plane to the rotor will excite the first lateral critical speed.

Where:

$U_b = 4W / N$

U_b = input unbalance from the rotor dynamic response analysis, in ounce-inches.

W = journal static weight load, (lbs.), or for bending modes where the maximum deflection occurs at the shaft ends, the overhung weight load (that is, the weight outboard of the bearing), (lbs.).

N = operating speed nearest the critical of concern, in revolutions per minute.

Performing an unbalanced coast down should make the first lateral critical speed location more recognizable in well-damped systems. As the motor passes through the critical speed an increase in the one times rotational vibration amplitude in conjunction with a shift in the one times rotational phase angle will be evident similar to the results in Figure 5.

Identifying the lateral critical speed will inform the user of areas where a speed block out range is required on ASD applications and it may also serve to resolve a vibration issue on an existing motor that is operating too close to a critical speed.

IV. WHAT IMPACT DOES VIBRATION HAVE ON MOTOR LIFE?

- **A. BALANCE**
- **B. RESIDUAL UNBALANCE**
- **C. VIBRATION LEVEL**
- **D. ROTOR STABILITY**

A. BALANCE

In order to determine how motor life is affected by balance, a definition of balance needs to be identified. The balance of a motor rotating assembly is characterized by the discrete frequency of one times the rotational speed of the motor (Figure 6). Other characteristics of imbalance include a rotating vector and an amplitude increase with speed.

The best measurement of this discrete frequency is from the shaft but it can be measured on the bearing housings. The discrete frequency of one times rotational speed on the shaft can be measured two ways: shaft probes (sleeve bearing motors only) and shaft riding stick shown in Figure 7. The shaft probes are more commonly used in the field and are more accurate. The shaft probes measure the electrical and mechanical runout of a specific area on the shaft. The shaft riding stick is placed on the shaft outside the bearing housing and responds to the shaft vibration along with the runout where the rider is be held.

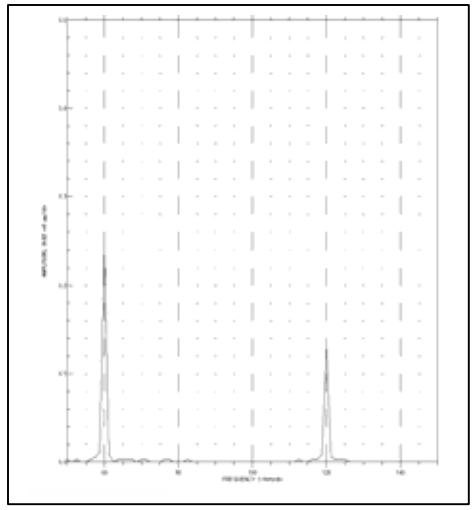

Figure 6. Discrete frequency spectrum

Figure 7. Shaft probe and shaft rider

By using these types of measurement devices, the one time vibration can be measured and documented during the life of the motor. With excessive movement the shaft could make contact with the non-lubricated sidewall of the bearing. This type of metal to metal contact will eventually cause a bearing failure.

During the manufacturing of the motor, the balance procedure is critical to building a motor that will meet or exceed the end users expectations. After the rotating assembly is balanced, the next step is to test the motor per the end user's specifications and verify that the balance component of the rotating assembly as well as other components of vibration are within the limits of the specification.

Once the motor is in service, the balance of the rotating assembly can change due to air ducts getting clogged with dust and excessive heat of the rotating assembly. If not addressed in a timely manner a problem may escalate and possibly lead to motor failure.

B. RESIDUAL UNBALANCE

Residual unbalance is the amount of unbalance remaining in a rotating assembly after the balancing procedure is completed. Every rotating assembly will have a residual unbalance. The residual unbalance test procedure is defined API 541. The typical units of measurement are ounce-inches or grams-millimeters. Results of a residual unbalance test are shown in Figure 8.

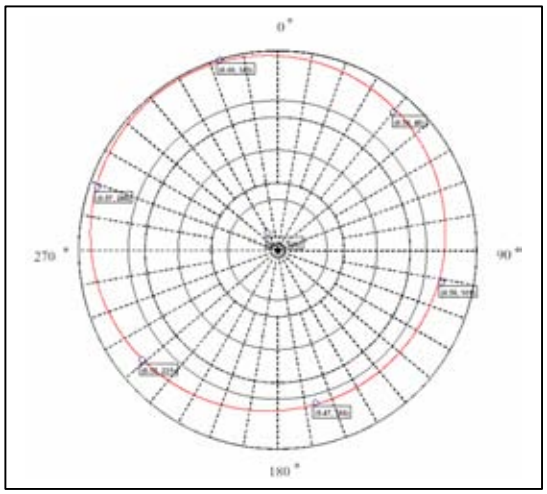

Figure 8. Residual unbalance plot

By completing a residual unbalance test during the manufacturing process, the location and amplitude of the residual unbalance is known and is independent of the balance machine, this data can be used for future reference. Performing this procedure shows the stability of the rotating assembly. Part of the API procedure is to place the trial weight in the first location again and record the balance data. This shows that the balance data is repeatable and that the rotor is stable. An extra step to check that the rotating assembly is stable is to record the balance data before and after the residual unbalance test.

A rotating assembly in the service shop can be tested using this same procedure to determine if the residual unbalance has changed over the years of service. This factor may affect the amount of rework needed to refurbish it for service. If the residual unbalance is close to the original data taken at the motor vendor, then the rotating assembly could be just balanced to the previous levels and rebuilt for service. If the residual unbalance is at a different location and different amplitude then rework of the rotating assembly may be necessary prior to rebuilding the motor.

C. VIBRATION LEVEL

Vibration levels are one of the main keys to motor life. Vibration is simply unintended motion of a machine or machine part from its position of rest. This unintended motion, if severe enough, may eventually lead to a catastrophic failure.

The vibration of a motor may result in a metal-to-metal contact in a ball bearing motor or a sleeve bearing motor. The ball bearing vibration would cause the radial movement of the ball bearings to remove the grease from between the bearing elements. This would cause metal-to-metal contact between balls and races, resulting in excessive heat and premature failure.

A field study on several non-critical 20 to 50 hp ball bearing motors operating at 1800 rpm gathered enough data to show the effects of vibration on motor life. These motors were selected because they would be able to run to failure without serious consequences. All of the motors started the test as new or newly rebuilt with vibration levels less than specified in NEMA MG 1. Motor vibration was monitored weekly with a hand held vibration monitoring equipment. Where possible, such as fan applications where the motor was coupled to a fan through a gearbox, the vibration of the fan was slowly increased by misadjusting the pitch of the fan blades. The remainder of the fans in the test served as a control and their vibration was not changed. After about eight months, the motors with the highest vibration levels began to generate high frequency noise from the ball bearings indicating that they were near failure.

After running the tests for about two years the results showed that if vibration level are reduced by 50% the motor life is 2.2 times greater. Unfortunately the testing was terminated before more definitive information was produced.

Another study was conducted at the same facility. The second study involved 1800-rpm machines with sleeve bearings, driving compressors on a refinery process unit. The horsepower range of these motors is 1000 hp to 8000 hp. Because of the criticality and value of these motors, they could not be run to destruction or be modified to increase their vibration levels.

The testing consisted of completely draining and cleaning the oil system during a maintenance cycle. All new oil was used to refill the oil system, prior to which a spectrographic analysis of the metal in the oil was obtained. Monthly oil samples were taken for laboratory analysis of the metal in the oil. Permanent vibration monitors continually tracked the vibration level of the test motors. Based on these tests, it became clear that as the vibration level of the motor increased,

the amount of tin, lead and antimony found in the oil increased at a rate greater than the square of the previous value. Also during routine maintenance intervals, all of the motors were opened and inspected for any signs of problems. Motors with higher vibration levels had much higher numbers of coil end turn looseness, cracking in the insulation, more evidence of 120 hz coil rubbing and more internal contamination. Just like the ball bearing study, the testing was terminated and no definitive information was produced except for a predictive conclusion from the data that was taken.

Due to this conclusion, the 4th edition of API 541 includes a section on the datasheet to specify lower vibration levels. This section allows the end user to predict motor life by using the estimated exponent that is listed above.

D. ROTOR STABILITY

Motor reliability is very dependent on the thermal rotor stability due to several factors. The best way to test a new motor for rotor stability is by completing a dynamometer load test. This allows the motor to be loaded to anticipated field conditions. It also allows the rotor to heat up evenly during the loaded test. Rotor stability can be verified by using the API 541 method of vibration changes from hot uncoupled and cold uncoupled conditions. The shaft vibration difference between the hot and cold conditions will show if the rotor is stable. This test shows how the rotor is affected by adding heat to the rotating assembly. By using this method of testing, the change in shaft vibration allows the end user to evaluate rotor stability.

During the motor operation, rotor stability is important in order to reduce down time and maintenance.

V. HOW ARE VIBRATION READINGS MEASURED USING TRANSDUCERS AND NON-CONTACTING PROBES?

Before this question can be answered, the difference between vibration detection transducers must be understood. Vibration detectors that are commonly used in industry can be divided into three types: Moving Coil, Proximity Detection, and Piezoelectric.

Moving Coil Vibration Transducer

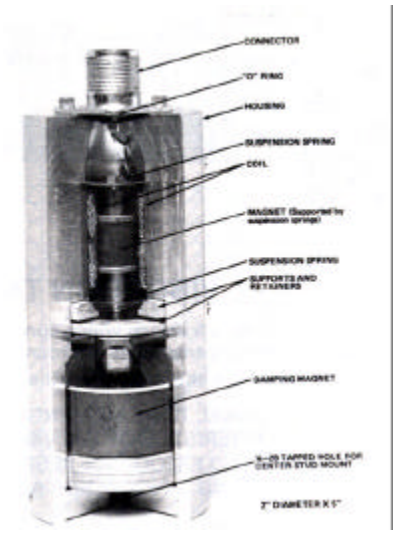

Figure 9. Cross-section of a moving coil vibration probe

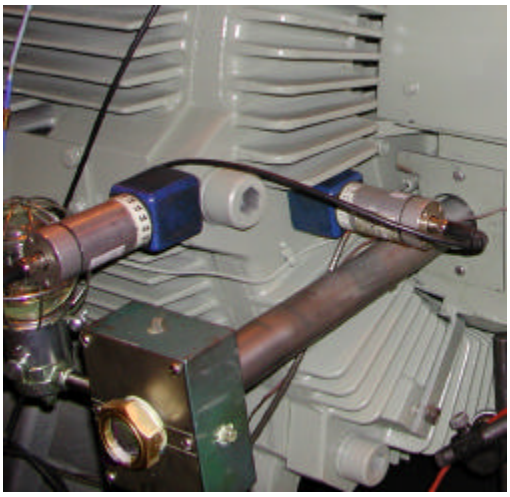

Figure 10. Moving coil vibration probe attached to a bearing housing with a magnetic base

Moving Coil Vibration Transducers:

This transducer provides a voltage output directly proportional to the probes vibration velocity. The output voltage is generated directly by a moving coil of wire that is in a magnetic field provided by the permanent magnet in the probe. The probe is usually mounted to a bearing housing either by a threaded stud, if the probe is to be permanently mounted on the machine being monitored or with a magnetic base if the probe is being installed for temporary applications. The vibration transducer is measuring the movement of the machine case with respect to the earth; it is difficult to get a true indication of the vibration level of the rotating element with respect to the bearings.

Piezoelectric Vibration Transducer

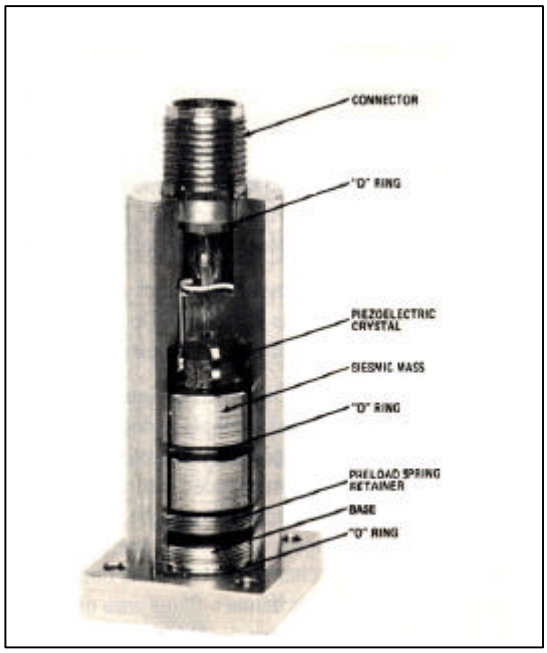

Figure 11. Cutaway of a Piezoelectric Vibration Transducer

Piezoelectric transducers measure absolute vibration relative to the earth. Unlike moving-coil velocity transducers, most piezoelectric transducers incorporate a solid-state design, and are really specialized piezoelectric accelerometers with embedded integration electronics. Because they incorporate no moving parts, they do not suffer from mechanical degradation and wear, and can be mounted vertically, horizontally, or at any other angle of orientation. The primary sensing material is either a natural quartz crystal or a synthetic crystalline material. The crystalline element in a piezoelectric transducer is basically a piece of polarized material (i.e. some parts of the molecule are positively charged, while other parts of the molecule are negatively charged) with electrodes attached to two of its opposite faces. These materials produce an electric field when the material changes dimensions as a result of an imposed mechanical force. This phenomenon is known as the piezoelectric effect. Because the output from the crystalline material is very low, amplifiers and signal conditioners are usually located near the crystalline structure to provide an output signal that is large enough and noise free to be used with conventional vibration detection equipment.

Proximity or Eddy Current Transducer

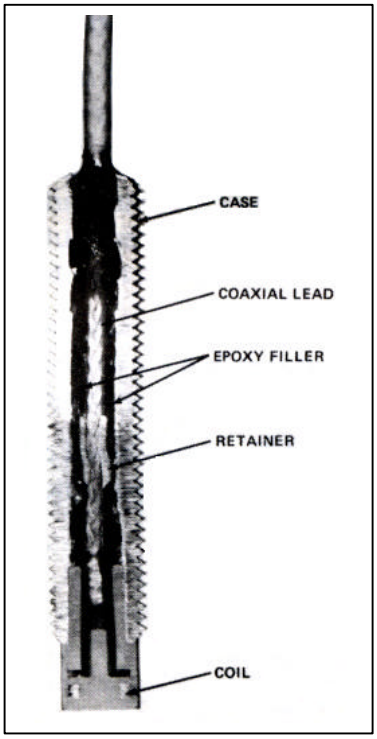

Figure 12. Cutaway of a non contact eddy current transducer

A non- contact eddy current vibration measuring system consists of a probe, an extension cable and an oscillator /demodulator (signal sensor or signal conditioner). A high frequency signal of a few megahertz is generated by the oscillator/demodulator and sent through the extension cable to the coil in the probe tip. The coil in the probe tip radiates a magnetic field into the target. See Figure 14.

Figure 13. Non-contact eddy current probe, cables and signal sensor.

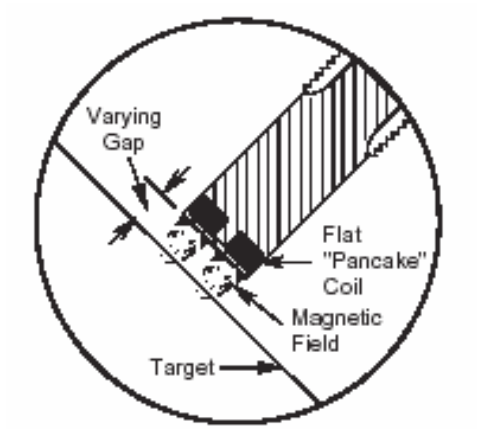

Figure 14. Eddy Probe Diagram

As a steel surface approaches the coil, eddy currents are generated on the surface of the steel. The field strength in the monitored steel increases or decreases with change in distance from the probe, which changes the intensity of the applied magnetic field. The oscillator/demodulator can detect changes in field strength and produces a dc voltage proportional to the field strength. The oscillator/demodulator linearizes and normalizes its output to a specific sensitivity (usually 200 mV/mil) throughout its working range. The oscillator/demodulator generates a dc voltage to represent the average probe gap, and an AC voltage is used to indicate surface movement and irregularities. These probes can be used for both radial vibration and distance measurements such as thrust position and shaft position.

Now that a basic understanding of vibration systems has been presented, it is easier to understand why vibration readings taken on the outside surface of a bearing housing can be much different from those obtained from non-contact probes. Non-contact probes measure the vibration of the rotating element with respect to the bearings. Moving coil and piezoelectric vibration probes measure the vibration of the motor frame with respect to the earth. Machines with a massive housing and light rotor will behave much differently than machines with a massive rotor and light housing.

VI. HOW IS MOTOR EFFICIENCY REALLY MEASURED?

There are multiple methods to measure motor efficiency. Some methods require the motor to be loaded by a dynamometer while others do not. The test method used to measure the motor efficiency usually is determined by the size of the motor, limitations of the testing facility and the desired accuracy. Smaller motors, less than 1000 hp, typically can be load tested on a dynamometer. Test methods for higher horsepower motors often depend on availability of a large dynamometer.

The IEEE Std. 112 is the method by which most motors are efficiency tested. The standard lists five methods by which a motor can be tested. A brief description of each test method follows.

A. Method A (Input-output)

Motors tested per IEEE Std. 112 Method A are connected to a mechanical brake or dynamometer and loaded in 25% increments from 25% to 150% load. Motor input voltage; input power, input current, output torque, speed and winding temperature are recorded. The efficiency is determined by the simple ratio of the output over input power, after the I^2R losses are corrected to the rated temperature. This method is typically not used since it is less accurate than other test methods.

B. Method B (Input-output with loss segregation)

IEEE Std. 112 Method B is the most common test method used today. When performed properly it can accurately calculate motor efficiency to within 0.1%. This method segregates the motor losses into five categories. These five categories being as follows:

- Friction and windage losses
- Stator iron losses
- Stator winding I^2R losses
- Rotor winding I^2R losses
- Stray load loss

Like Method A, this method requires that a brake or dynamometer load the motor. Motor load is applied in 25% increments from 25% load to 150% load. Motor input voltage; input power, input current, output torque, speed and winding temperature are measured and recorded. This data is then used to determine the motor efficiency by breaking the motor losses down into the five categories.

Before the motor is loaded a no load saturation test in performed to determine the motor core losses (W_{core}) and the friction and windage losses (W_{fw}). With loaded test values the motor stator (primary) winding I^2R losses (W_{stator}), the rotor (secondary) winding losses (W_{rotor}) and the stray load loss (W_{sll}) can be determined at each load point. The simplified version of equations for each follows:

Stator I^2R losses (W_{stator}):

W_{stator} = 1.5 * $Amps^2$ * Winding resistance @ rated temperature.

Rotor I^2R losses (W_{rotor}):

W_{rotor} = (Input power – W_{fw} - W_{fw}) * Slip P.U

Stray load losses (W_{sll}):

W_{sll} = (Input power- Output power) – (W_{fw} + W_{stator} + W_{rotor} +W_{core})

Where: W_{fw} = Friction and Windage losses
W_{core} = Core losses
Slip P.U. = Rotor per unit slip.

Since the stray load losses are calculated for every load point from 25% to 150% their values can be plotted versus load torque squared. However, the measurements will have some amount of error and the load cell may have a zero offset. Therefore, a linear regression of the load torque squared is plotted back to zero and the zero offsets corrected to reflect the actual motor stray load losses. An example of a stray load loss correction by linear regression curve can be found in figure 15.

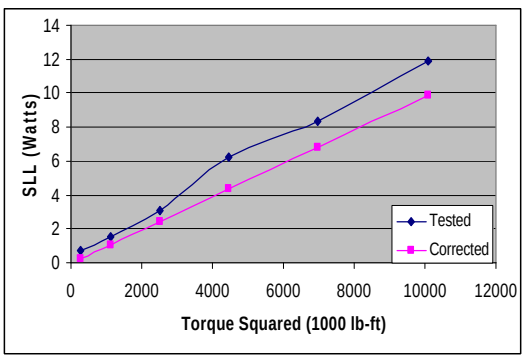

Figure 15. Stray load loss test plot

Once the stray load loss values are determined the motor efficiency can be calculated for each load point. The efficiency for a load point, as follows.

W_{Total} = W_{stator} + W_{rotor} +W_{core} + W_{fw} + W_{sll}
Efficiency = (Input Power - W_{Total})/Input Power

The advantages of the method B test are that motor losses are accurately measured. The zero offset of the measured torque is accounted for. There are no assumed losses in this method as in other methods that will be reviewed later.
The disadvantages of the method B test are that a dynamometer must be available and the motor properly aligned on the dynamometer. Limited numbers of facilities have the capability to load test large horsepower motors. Therefore, locating such a facility may be difficult.

C. Method C (Duplicate Machines)

This method can be employed only when duplicate machines are available. The two machines are coupled together and must be electronically connected to two sources of power. The frequency of one of the power supplies must be adjustable. During the test, one machine is run as a motor at rated voltage and frequency, ant the other is run as a generator at rated volts per hertz, but at a lower frequency to produce the desired load. Electrical input and output readings are recorded, along with the stator winding temperatures and the speed of both machines. The efficiency is calculated by loss segregation method.

The advantages of this are that motor efficiency is determined by a segregated loss method and a dynamometer is not required. However, two duplicate motors must be available and a variable frequency power supply must also be available.

D. Method E or E1 (Input measurement).

In this method the motor is connected to a variable load. The output is determined by subtracting the total losses from the input power. As in other methods, the secondary and primary I^2R load losses are determined by measuring winding resistance, input power, current, voltage, slip and temperature. The stray load losses can be determined by a separate reverse-rotation test and a rotor removed test. The E1 method permits the stray load losses to be assumed per Table I.

TABLE I.
Stray load loss t able

Rating	Stray load loss percent of rated output
1-125 hp	1.8%
126-500 hp	1.5%
501-2499 hp	1.2%
2500 hp and greater	0.9%

The percent stray load losses in Table 1 are conservative and typical losses for most high efficiency motors would be less than those found in the table.

E. Method F or F1 (Equivalent Circuit)

This method does not require a motor to be coupled to a dynamometer or a variable load. The motor performance parameters such as efficiency, power factor and torque are calculated from the equivalent circuit shown in Figure 16.

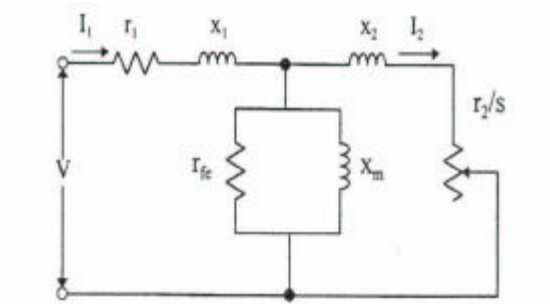

Figure 16. Equivalent circuit diagram

Where:

r_1 = Stator resistance
x_1 = Stator reactance
r_2 = Rotor resistance
x_2 = Rotor reactance
r_{fe} = Iron loss resistance
x_m = Magnetizing reactance

The equivalent circuit values are determined by no-load saturation test, locked-rotor test and impedance test. The impedance data at operating conditions are determined by three phase locked rotor testing at 100%, 50% and 25% of rated frequency and at rated current. The stray load losses can be determined by a separate reverse-rotation test and a rotor removed test. The F1 method permits the stray load losses to be assumed per Table 1.

There are advantages and disadvantages of each test. Test method B, most commonly used in the industry today, may provide the most accurate results. Often the method F test is used to determine efficiency. The method F test does not require loading or alignment to a dynamometer. Therefore, it is often a lower cost alternative. The disadvantage of the method F test is that stray load losses are typically assumed or assigned per Table 1. The assumed value of stray may not provide a true value of motor efficiency.

VII. WHAT IS THE DIFFERENCE BETWEEN THE NOMINAL EFFICIENCY AND THE MINIMUM GUARANTEED EFFICIENCY?

The full-load efficiency values of NEMA Design A, B and C single speed induction motors from 1 to 500 horsepower, rated 600 volts and less are listed in NEMA MG 1 Part 12. The efficiency value listed is a nominal efficiency and is required to be stamped on the motor's nameplate. The standard also requires that all motors have a minimum efficiency that is based on 20% more losses than the nominal value.

The NEMA standard also lists full load efficiency values for NEMA Premium™ motors. The full load efficiency values are for motors rated 1 through 500 hp and 2 through 8-pole. Form wound motors as well as random wound motors are included in the NEMA Premium™ tables. Nominal and minimum efficiency levels are different for form wound and random wound motors. As with the standard efficiency values, the minimum efficiency values for NEMA Premium™ motors are based on 20% more losses than the nominal values.

The efficiency values are based on test by dynamometer (Method B) per IEEE standard 112, unless otherwise specified. The motor losses that must be included are stator I^2R loss, rotor I^2R loss, core loss, friction & windage loss and stray load loss. Vertical motors that cannot be tested per method B may be tested per method E. The bearing losses for vertical motors only include the portion of thrust bearing losses produced by the motor.

Typically when evaluating motor efficiency, most users use the motor's nominal efficiency. However, per the NEMA standards the difference between nominal and minimal efficiency is 20% of the motor losses. For example, a motor with a nominal efficiency of 95.0% has a minimum or guaranteed full load efficiency of 94.1%. The NEMA efficiency values are set up in steps of 10% change in losses starting at 99.0% ending at 50.5%. Each 10% change is considered a band. So a motor minimum efficiency per NEMA is always two bands lower than the nominal value.

When considering purchasing a motor, the minimum efficiency value should be used to evaluate total life cycle cost. While NEMA allows minimum efficiency to be two bands (20%) below nominal, some motor manufacturers will guarantee motor efficiency one band (10%) below nominal. This small change in minimum efficiency could result in large savings. For example, a TEFC motor rated 300 hp @ 1800 rpm, 460 volts has a nominal full load efficiency of 96.2% for NEMA Premium™. The motor minimum full load efficiency would be 95.4% (two bands lower or 20% higher loss). If we evaluate the energy cost of the motor that operates 24 hours a day 320 days per year at $0.05 per kW-hr, the difference between nominal and minimum would be as follows:

Nominal efficiency motor loss (96.2% efficiency):
kW loss = [300 hp * .746 * (1-.962)]/.962
kW loss = 8.84 kW

Minimum efficiency motor loss (95.4% efficiency, two efficiency bands lower):
kW loss = [300 hp * .746 * (1-.954)]/.954
kW loss = 10.79 kW
Energy cost difference (two bands):
annual cost = (10.79kW – 8.84kW) * .05$/kW-hr * 320 days *24 hrs.
annual cost = $748.80 per year.

Minimum efficiency motor loss (95.8% efficiency, one efficiency band lower):
kW loss = [300 hp * .746 * (1-.958)]/.958
kW loss = 9.81 kW

Energy cost difference (one efficiency band lower):
annual cost = (9.81kW – 8.84kW) * .05$/kW-hr * 320 days *24 hrs.
annual cost = $373.13 per year.

Therefore, a motor with a guaranteed minimum full load efficiency one band lower may cost $375.67 less to operate than one that was guaranteed to have a minimum full load efficiency two bands below nominal. When purchasing a motor the minimum full load efficiency may be a better comparison than nominal efficiency. A manufacturer guaranteed minimum efficiency or number of bands below NEMA may also reflect how well the manufacturing process is controlled.

VIII. HOW DOES EFFICIENCY CHANGE WITH MOTOR LOAD?

Motor efficiency usually varies significantly with load. The amount of efficiency variation with load depends on the motor's electrical design, the motor's enclosure and the distribution of losses within the motor. While NEMA limits the minimum full load efficiency for most motors, part load efficiencies are dependent on the motor manufacture and motor design. Motors are typically designed to minimize material cost while achieving the required full load efficiency and temperature rise.

The motor's total losses decrease with load. There are five categories of losses within an induction motor and not all of them decrease with load. Therefore, the distribution of losses within the motor will affect the part load efficiency of the motor. For fixed speed motors, the motor's stator I^2R losses, rotor I^2R losses and the stray load losses all decrease with load. The motor's friction & windage losses and core losses remain constant with load.

Motors with a higher percentage of Core losses and Friction & Windage losses typically will have lower efficiencies at part load than motors with a higher percentage of stator I^2R losses, rotor I^2R losses and the stray load losses. It is possible to achieve the same full load motor efficiency with a different distribution of motor losses. An example follows.

The motor in this example is rated 900 hp at 1800 rpm, 4000 volts, with TEFC enclosure. The motor has a full load efficiency of 96.0%. Decreasing or increasing the number of winding turns can change the distribution of losses. Table II shows the changes in efficiency, distribution of losses and kilowatts with the change in the electrical design.

TABLE II.
900 hp motor example

Design	X	Y	Z
Turns	10	9	8
Efficiency			
Full load	96.0%	96.0%	96.0%
¾ load	96.2%	96.0%	95.8%
½ load	95.9%	95.3%	94.9%
¼ load	93.7%	92.3%	91.6%
Watts Loss (kW)			
Full load	27.85	27.97	27.66
¾ load	19.91	21.29	21.88
½ load	14.52	16.66	17.87
¼ load	11.38	13.94	15.47
Distribution of Losses (kW)			
Core	4.27	6.78	8.13
Stator I^2R	8.30	6.73	5.74
Rotor I^2R	4.87	3.04	2.37
SLL	6.04	6.04	6.04
F&W	5.37	5.37	5.37

For this, the motor's full load efficiency remains constant while part load efficiency changed as motor flux is changed. Design X is the lowest flux design and in this example has the best efficiencies across all loads. The problems with design X is that it has low locked rotor and break down torques levels and may have difficulty starting many loaded applications. The motor has a poor balance of losses. Typically, the primary and secondary I^2R losses are more difficult to dissipate in a TEFC motor. While this motor may have the same full load losses as the other two designs, it likely would have a higher temperature rise at full load due to the higher percentage of I^2R losses.

Design Y would likely be the standard or typical design for this rating. While it does not have the best efficiency across the load range, it still has a good ¾ load efficiency. This motor would have good torques and would start most loaded applications. The losses in this design are well balanced and no one loss is much higher than the others are.

Design Z is the highest fluxed design and has the lowest efficiency levels across all part loads. This motor has very high torques, but also has high starting currents. Note that in this the core losses are much higher than the stator I^2R and rotor I^2R losses.

The data in Table II shows that part load efficiency can vary from one motor design to another even if full load efficiency remain constant. The distribution of losses within the motor dictates what the part load efficiency levels will be. Since the motor's core losses and F&W losses do not change with load, they have a larger impact on part load efficiencies. Primary and secondary I^2R losses drop with load and have a greater impact on full load efficiency

levels. By properly balancing the loss distribution within a motor good full load and part load efficiency levels can be achieved.

Part load efficiency becomes important when a motor is oversized for an application. In most cases the efficiency of a motor remains relatively constant through ¾ load and starts to decrease below ¾ load. Therefore, motors should be sized such that they operate between ¾ and full load.

IX. CONCLUSIONS

The specification of a highly engineered motor requires the expertise of rotating equipment engineers in evaluating issues relating to the long-term successful performance of motors. The topics discussed in this paper attempt to provide the user with the basic knowledge of items that should be carefully considered when the motor specification process is initiated.

X. REFERENCES

[1] J.H. Holdrege, William Subler, "AC Induction Motor Torsional Vibration Consideration – A Case Study," IEEE-PCIC Conference Record 1981

[2] Hall, Holowenko, Laughlin, "Theory and Problems of Machine Design," McGraw-Hill Book Company 1961

[3] ANSI/API Standard 541-2003, "Form Wound Squirrel Cage Induction Motors 500 HP and Larger

[4] NEMA MG 1-2003, Motors and Generators

[5] IEEE 112-1996, IEEE Standard Test Procedure for Polyphase Induction Motors and Generators

[6] Gary Donner, Bill Subler, Steve Evon, "A Motor Primer Part 1," IEEE-PCIC Conference Records

[7] Gary Donner, Bill Subler, Steve Evon, "A Motor Primer Part 2," IEEE-PCIC Conference Records

[8] Gary Donner, Bryan Oakes, Steve Evon, "A Motor Primer Part 3," IEEE-PCIC Transactions 2003

[9] Bryan Oakes, Gary Donner, Steve Evon, "A Motor Primer Part 4," IEEE-PCIC Transactions 2004

XI. VITA

Bryan K. Oakes (M'00-SM'05) graduated from the University of North Carolina-Charlotte in 1989 with a BSME degree. He has been with Rockwell Automation, Reliance Electric Division in Kings Mountain, NC since 1989 and is currently the Manager of LAC Design & Mechanical Engineering. He is a Senior IEEE member and a member of the API 541 and API 547 subcommittees and an author of three other IEEE papers.

Gary Donner graduated from California State Polytechnic University, San Luis Obispo, in 1970 with a BSEE degree. Retired from Shell Oil Products after 35 years. During that time he was the Supervising Engineer for Instrument and Electric Utilities, he provides consulting services for Shell Oil Products U.S. Southern California based operations. Holder of 3 patents, author of several IEEE papers, an IEEE Fellow and a Registered Engineer in the State of California, he has been a member of the State of California High Voltage Advisory Committee. He is active in the IEEE and API where he is on several standard drafting committees, and he is the past Committee Chairman of the IEEE PCIC Manufacturing Sub-Committee, the past Chairman of the API 541 Induction Motor Committee, and the Chairman of the IEEE P1458 Circuit Breaker Committee.

Steve T. Evon (M'98-SM'03) received a Bachelor degree in electrical engineering technology from Southern Institute of Technology, Marietta, GA, in 1985. Since 1985 he has been with Reliance Electric Company. From 1985 to 1999, he was Electrical Engineer at the Kings Mountain, NC, motor facility. From 1999 to 2002 he was the Senior Development Engineer for Rockwell Automation-Reliance Electric Company, Greenville, SC. He is currently Engineering Manager for Variable Speed and Specialty motors at Rockwell Automation, Reliance Electric Division. He has authored six other IEEE papers.

Timothy Wayne Paschall (M'03) graduated from the University of North Carolina-Charlotte in 1996 with a BSME degree. He has been with Rockwell, Reliance Electric Division in Kings Mountain, NC since 1994 and is currently a Mechanical Design Engineer. He is a member of the IEEE 841 subcommittee and an author of one previous IEEE paper.